MUJIE 慕杰®
YOUR AUTOMATION,YOUR MUJIE!

旋转编码器MG100T系列
MG100T Incremental encoder series

外径Φ100，空心轴，孔径Φ30或Φ45薄型设计，无键槽锁紧环固定，轴孔规格多选，主要用于电梯，轻工机械，位移及速度测量等

external diameter Φ 100, hollow shaft, hole diameter Φ 30 or Φ 45 thin design, Keyless locking ring fixation, multiple shaft hole specifications, mainly used for displacement and speed measurement of elevator and light industrial machinery, etc

▶ 型号说明Model Explanation

MG	100	T	30	-F-	(1000)	BZ	5-40	G	2	□
基本型号 Model M:常规增量型 Incremental encoder M□: 特殊型号定义 Speciall definition	主体外径OD 100:Φ100mm	轴型Shaft type: 全空心轴 Hollow shaft	孔直径: 30:Φ30mm 35:Φ35mm 38:Φ38mm 40:Φ40mm 45:Φ45mm	输出方式 Output configuration : F:推挽输出 Push-pull C:集电极开路 Open collector E:电压输出 Voltage L:AM26LS31驱动输出Driver output (driving element AM26LS31) T:ICHD7长线驱动输出Driver output (driving element ICHD7)	脉冲数/分辨率 Resolution 100-2500P/R	输出相 Outputsignal: B:AB两相 BZ:ABZ三相	电压 Supply voltage 5:5V 5-40:5-40V	出线方式 Outlet way G:侧出线 Side outlet F:侧出线防水 Side outlet waterproof E:后出线 Bottom outlet	线缆长度 Cable 2 : 2m	客户定制 Customized informat

▶ 电缆线线色说明 Cable Color Explanation

信号线Signal	VCC	0V	A	B	Z	A/	B/	Z/	屏蔽线Shield
5芯电缆线5 wires	红Red	黑Black	绿Green	白White	黄Yellow	-	-	-	N.C
8芯电缆线8 wires	红Red	黑Black	绿Green	白White	黄Yellow	棕Brown	灰Gray	橙Orange	N.C

注1：电缆颜色若有更改，恕不另行通知，请以编码器标签或说明书上的颜色定义为准。Note1：Please refer to color table or product instruction to connect wires.Chang of wire color will not be informed respectively.
注2：电缆线标准线长2米，如需其他规格在订货中备注说明。Note2：Standard cable length is 2m.Other length can be customized.

▶ 技术规格Specification

电气参数 Electric parametar			
输出电路 Output circuit	驱动器 Drivers L	C、E、F	驱动器 Drivers T
电源电压Mains voltage	+5V±5%	+5V~40V	+8V~40V
消耗电流Current consumption	≤60mA	≤120mA	≤120mA
允许负载Allowable load	20mA	30 mA	20mA
信号高电平Signal high electrical level	≥2.5V	≥VCC*70%V	≥VCC*70%V
信号低电平Signal low electrical level	≤0.5V	≤0.5V	≤0.5V
上升/下降时间Rise /down time	≤100ns	≤1us	≤100ns
响应频率Response frequency	100KHz	100KHz	100KHz
机械及环境参数Mechanical and Environmental			
径向负载 Radial load	≤30N	抗冲击 Concussion resist	1000m/s²，6ms
轴向负荷Axial load	≤15N	抗振动Vibration resist	100m/s²,10~200Hz
起动力矩 Storque	≤2×10⁻³N.m	工作温度Working temperature	- 20℃~+85℃
最高转速 Tiptop rotate speed	6000r/min	储存温度Storing temperature	- 20℃~+85℃
转动惯量 Runing inertia	20g/cm²	相对湿度Relatively humidity	≤RH85%无结露No icing
允许角加速度Allowable acceleration	1×10⁴rad/s²	防护等级Protect grade	IP54
重量weight	约About 0.7kg		

▶ 电路输出方式(示例) Example for output circuit

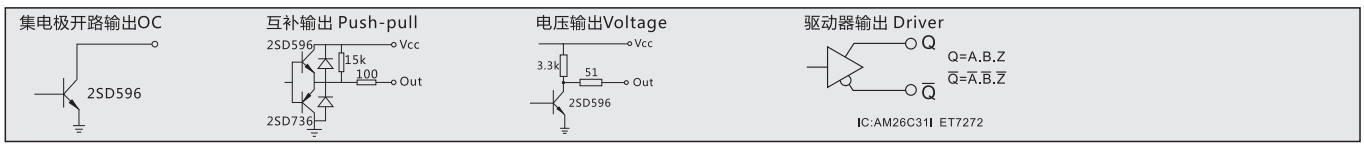
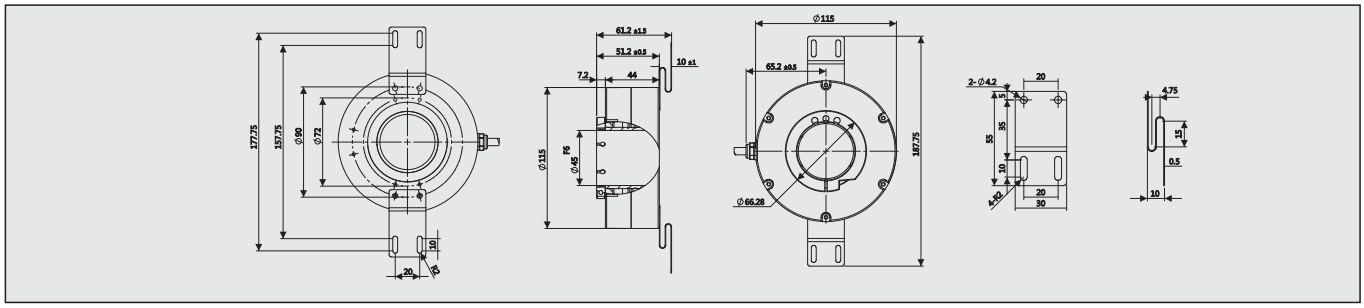
▶ 安装尺寸图 Mounting Dimensions(单位Unit:mm)